Electric Reliability

Sam Randazzo
Public Utilities Commission of Ohio

December 10, 2019

"Meeting the reliability expectations of consumers requires the bulk power system to be **planned**, **designed**, **constructed**, **operated**, **maintained**, and **restored** (as necessary following the loss of electric infrastructure) as described by specific, pre-determined tests or criteria. As such, the bulk power system is evaluated, assessed, and planned to ensure that an adequate supply of electricity is available to meet current and future needs."

Reliability Assessment Guidebook, Version 3.1, August 2012, North American Electric Reliability Corporation, at page 7.
https://www.nerc.com/files/Reliability%20Assessment%20Guidebook%203%201%20Final.pdf

"Keeping the lights on" is dependent on the successful coordinated completion of multiple functions with a necessary appreciation for their dynamic interrelationships.

Planning

Design

Construction

Operation

Maintenance

Restoration

"Unlike water or gas, electricity cannot be stored in large quantities. It must be generated the instant it is used, which requires supply to be kept in constant balance with demand. Furthermore, electricity flows simultaneously over all transmission lines in the interconnected grid system in inverse proportion to the electrical resistance of the lines, so electricity generally cannot be routed over specific lines. This means generation and transmission operations in North America must be monitored and controlled in real time, 24 hours a day, to ensure a reliable and continuous supply of electricity to homes and businesses. This requires the cooperation and coordination of hundreds of electricity industry participants."

North American Electric Reliability Corp.
https://www.nerc.com/AboutNERC/Documents/Understanding%20the%20Grid%20AUG13.pdf

"First, electricity flows at close to the speed of light (186,000 miles per second or 297,600 km/sec) and is not economically storable in large quantities. Therefore electricity must be produced the instant it is used."

"Second, without the use of control devices too expensive for general use, the flow of alternating current (AC) electricity cannot be controlled like a liquid or gas by opening or closing a valve in a pipe, or switched like calls over a long-distance telephone network. Electricity flows freely along all available paths from the generators to the loads in accordance with the laws of physics—dividing among all connected flow paths in the network, in inverse proportion to the impedance (resistance plus reactance) on each path."

Final Report on the August 14, 2003 Blackout in the United States and Canada at page 6
https://www.ferc.gov/industries/electric/indus-act/reliability/blackout/ch1-3.pdf

Planning

Design

Construction

Operation

Maintenance

Restoration

Electricity Production, Transmission and Distribution "Islanded" Network

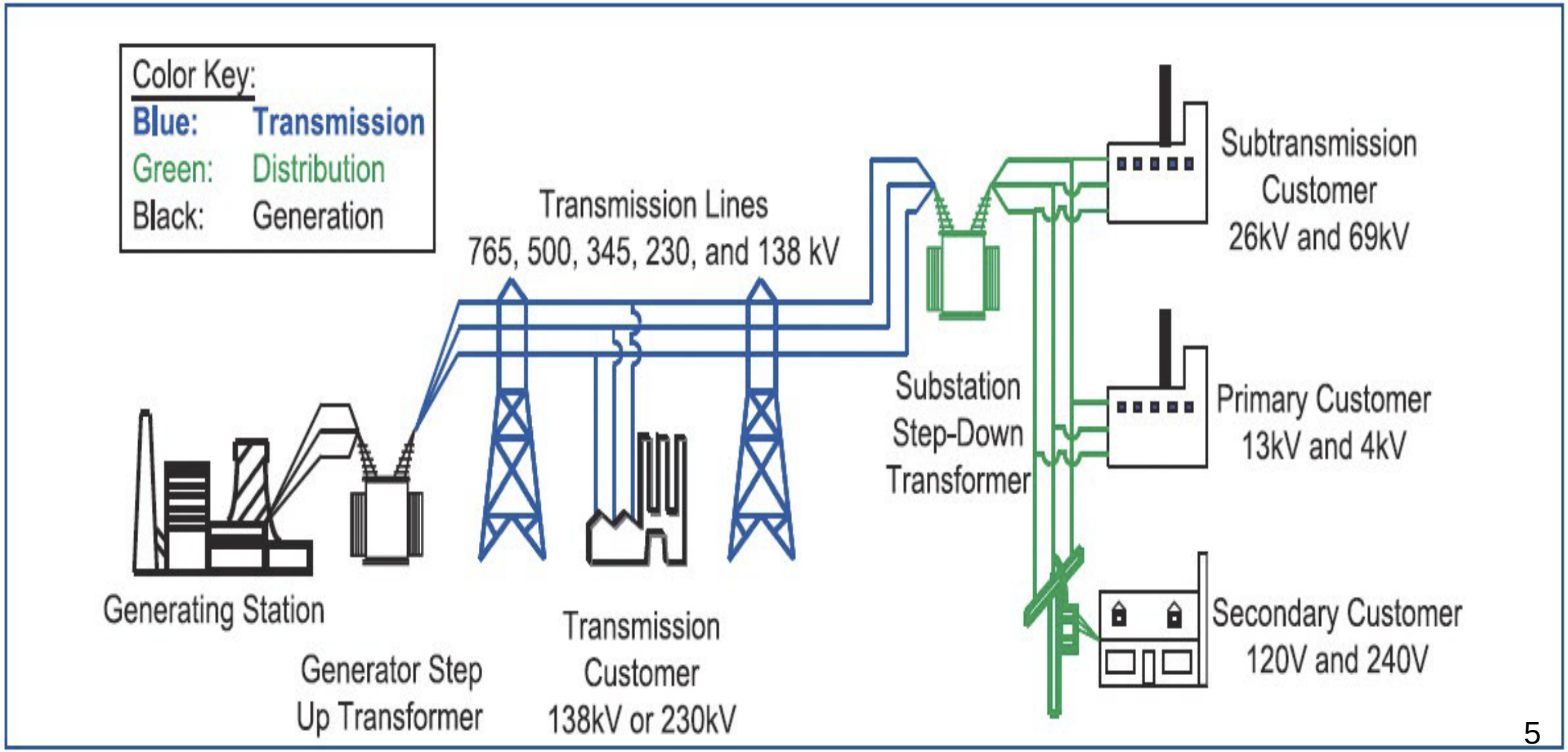

Interconnected Electric Production and Transmission Networks

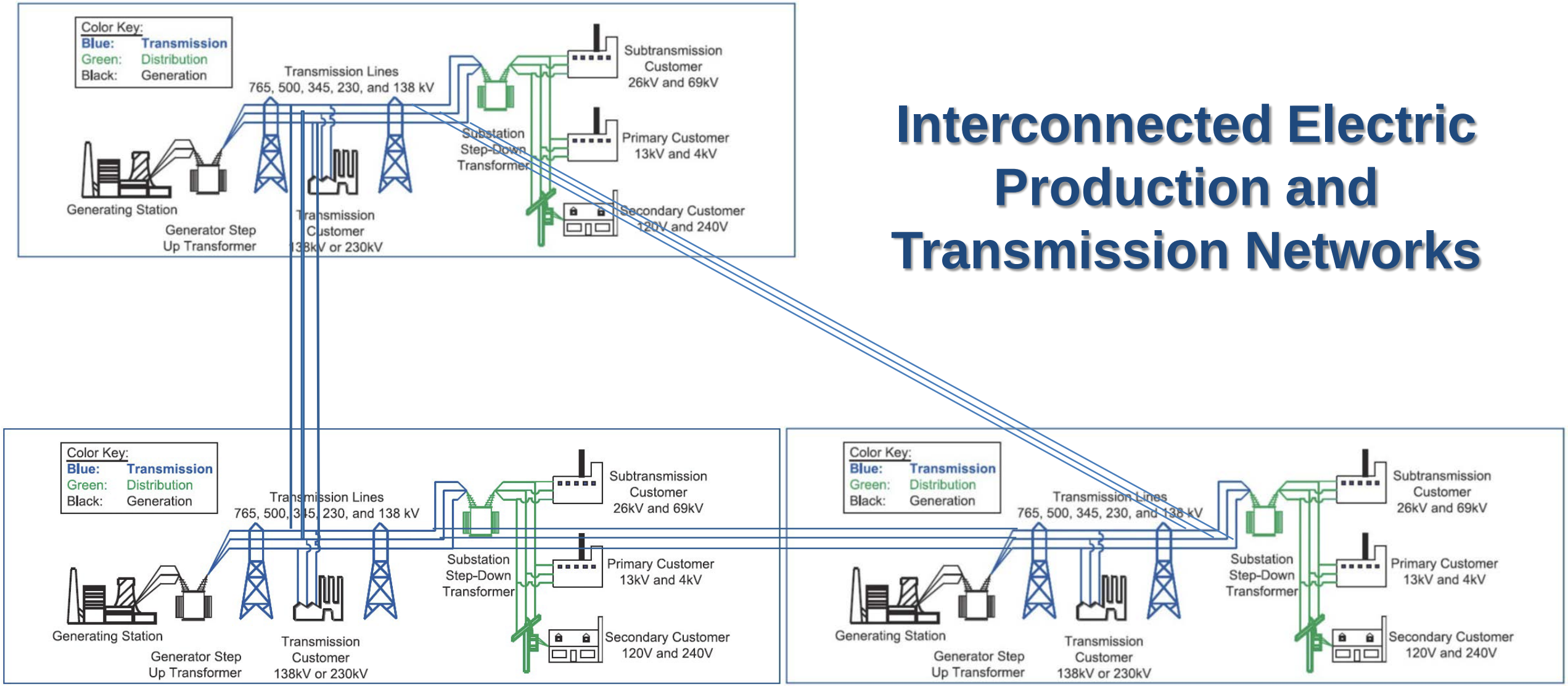

Section 215 of the Federal Power Act

- **The Energy Policy Act of 2005 ("EPAct 2005") added Section 215 to the Federal Power Act ("FPA").**
- **Section 215 of the FPA tasked the Federal Energy Regulatory Commission ("FERC") with overseeing the development, implementation and enforcement of mandatory reliability requirements applicable to the "bulk power supply system" and "users, owners and operators".**
- **Congress gave FERC the authority to certify a non-governmental entity ("electric reliability organization") to develop and enforce mandatory "Reliability Standards" subject to FERC's supervisory authority.**
- **FERC has certified the North American Electric Reliability Corporation ("NERC") as the electric reliability organization, approved eight regional entities that serve as regional compliance entities, approved over 100 mandatory Reliability Standards, issued directives for the development of additional Standards and reviewed many electric reliability organization compliance and enforcement actions.**
- **FERC's reliability mission recognizes the need for a dynamic approach that evolves over time.**

FERC Reliability Primer https://www.ferc.gov/legal/staff-reports/2016/reliability-primer.pdf
For historical background see the Final Report on the August 14, 2003 Blackout in the United States and Canada
https://www.ferc.gov/industries/electric/indus-act/reliability/blackout/ch1-3.pdf

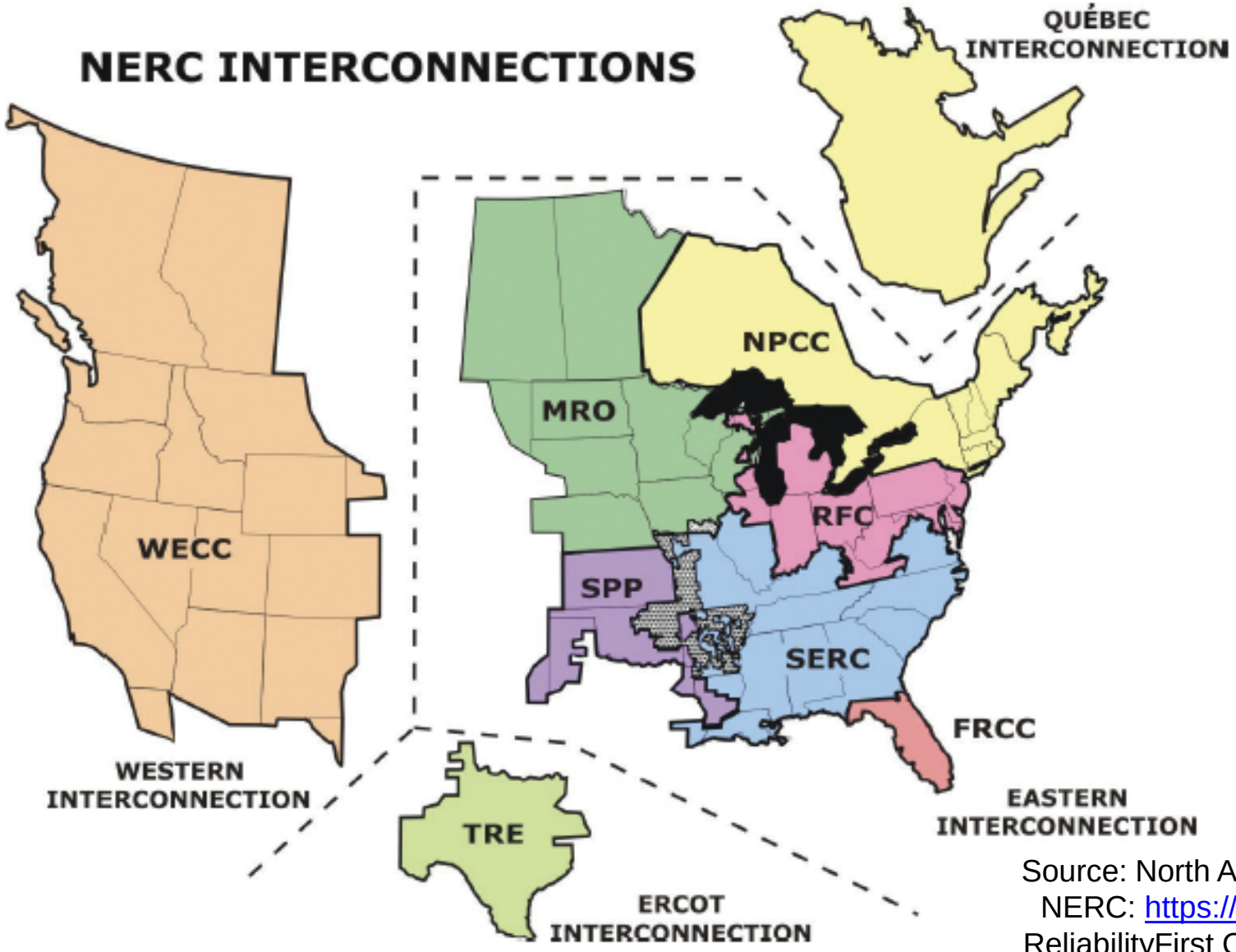

FRCC	Florida Reliability Coordinating Council
MRO	Midwest Reliability Organization
NPCC	Northeast Power Coordinating Council
RFC	ReliabilityFirst Corporation
SERC	SERC Reliability Corporation
SPP RE	Southwest Power Pool Regional Entity
TRE	Texas Reliability Entity
WECC	Western Electric Coordinating Council

Source: North American Electric Reliability Corporation ("NERC")
NERC: https://www.nerc.com/AboutNERC/Pages/default.aspx
ReliabilityFirst Corp: https://rfirst.org/about/Pages/AboutUs.aspx

Normal and Abnormal Frequency in U.S. Alternating Current Electric Grid

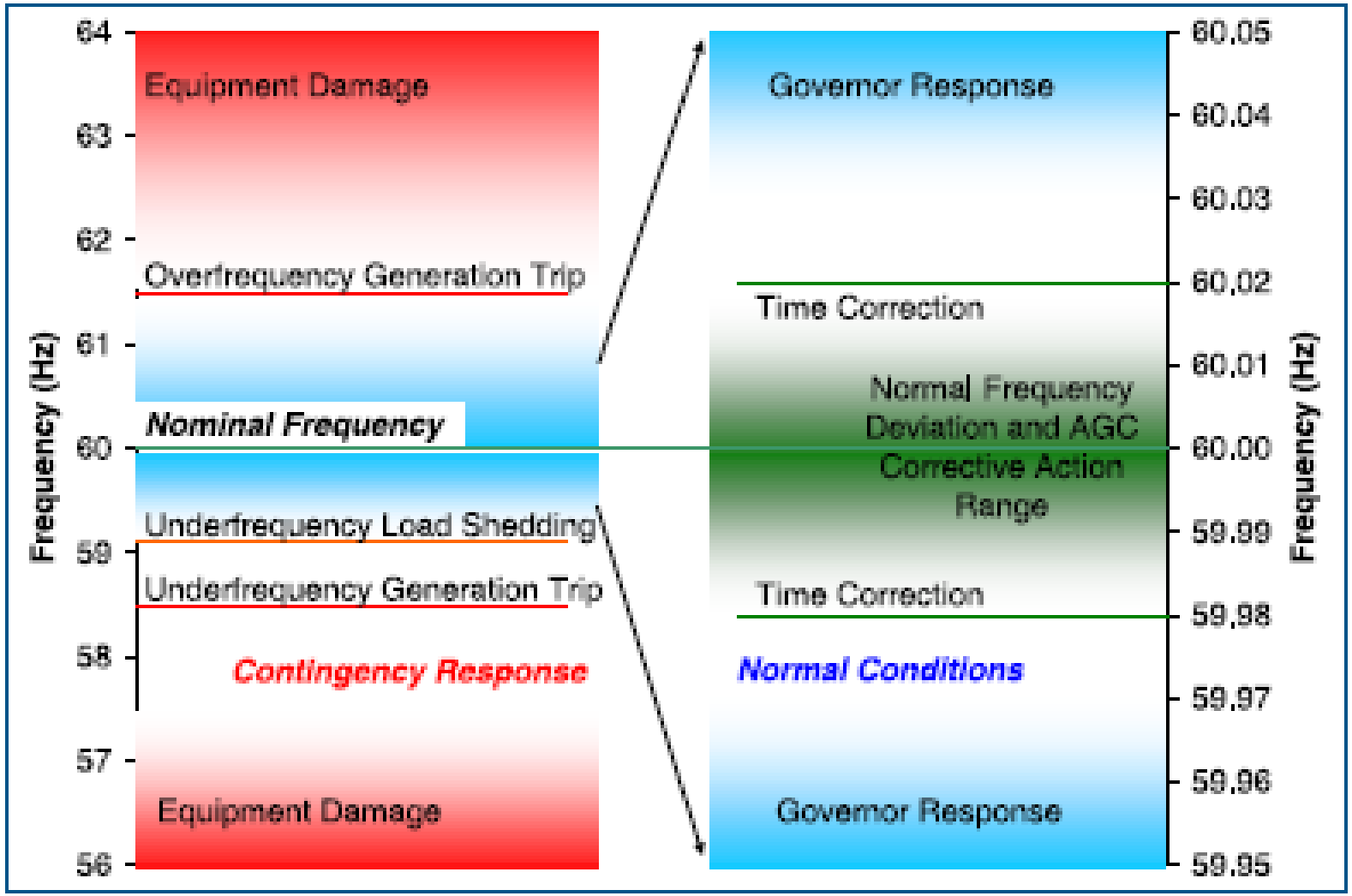

Planning

Design

Construction

Operation

Maintenance

Restoration

Final Report on the August 14, 2003 Blackout in the United States and Canada at page 7
https://www.ferc.gov/industries/electric/indus-act/reliability/blackout/ch1-3.pdf

"Each year, NERC is responsible for independently assessing and reporting on the overall reliability, adequacy, and associated risks that could impact the upcoming summer and winter seasons as well as the long-term, 10-year period. As emerging risks and potential impacts to reliability are identified, special assessments are conducted that provide similar technical framework and insights about the range and specific aspects of these to guide steps that may be warranted. Unbiased judgment of industry's plans for maintaining electric reliability in the future are founded on solid engineering through collaborative and consensus-based assessments."

- **Long-Term Reliability Assessments** annually assess the adequacy of the Bulk Electric System in the United States and Canada over a 10-year period. The reports project electricity supply and demand, evaluate transmission system adequacy, and discuss key issues and trends that could affect reliability.
- **Summer and Winter Assessments** assess the adequacy of electricity supplies in the United States and Canada for the upcoming summer and winter peak demand periods.
- **Special Assessments** are conducted on a regional, interregional, or interconnection-wide basis, as needed.
- **Methods and Assumptions** documents (provided below) include the methods and assumptions used in the development of the various assessments. This information is modified only as frequently as the assessment areas change or enhance processes for assessing reliability.

NERC: https://www.nerc.com/pa/RAPA/ra/Pages/default.aspx

Electricity Production, Transmission and Distribution Network

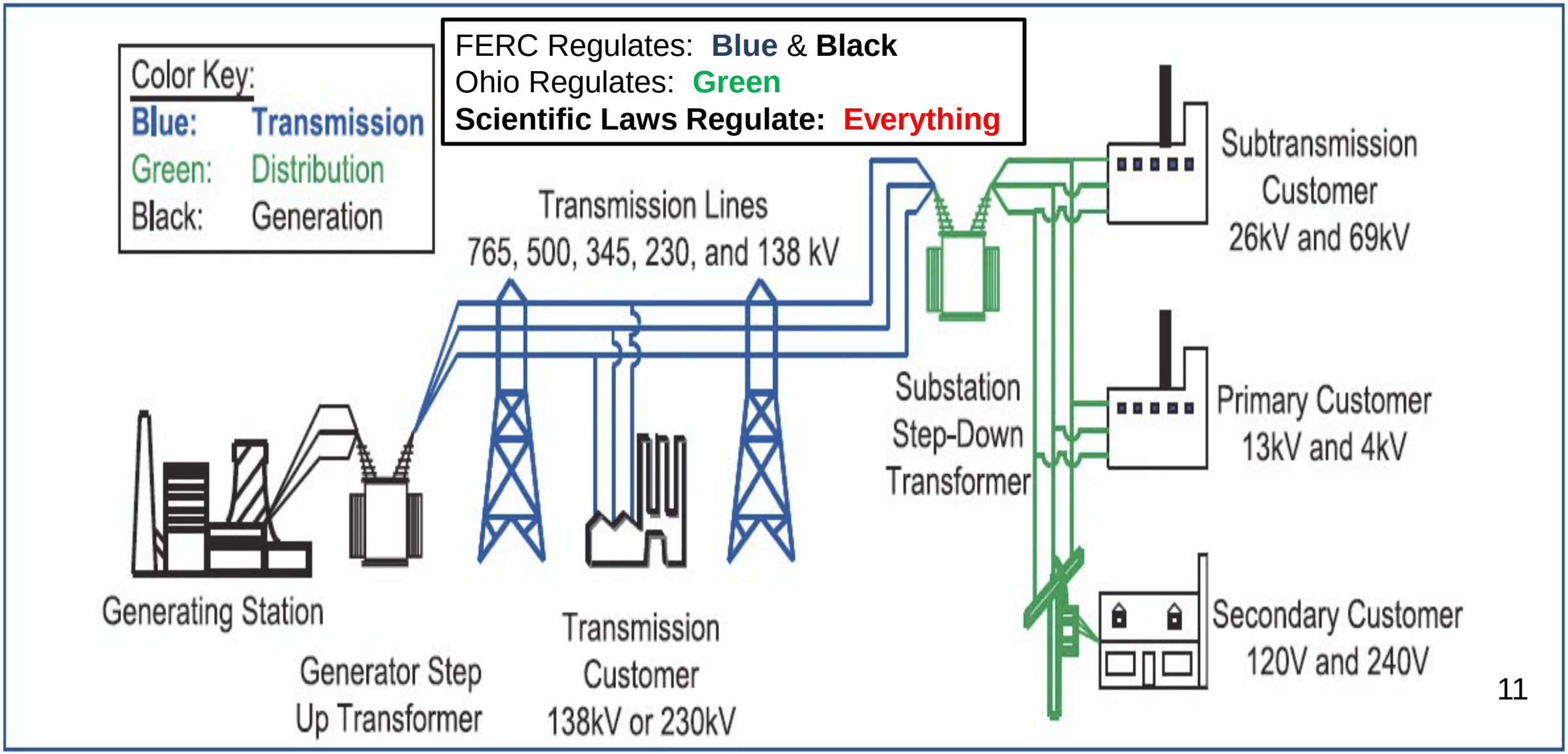

Evolution of Preferred Means of Maintaining Reliability

Positive Performance v Negative Intervention

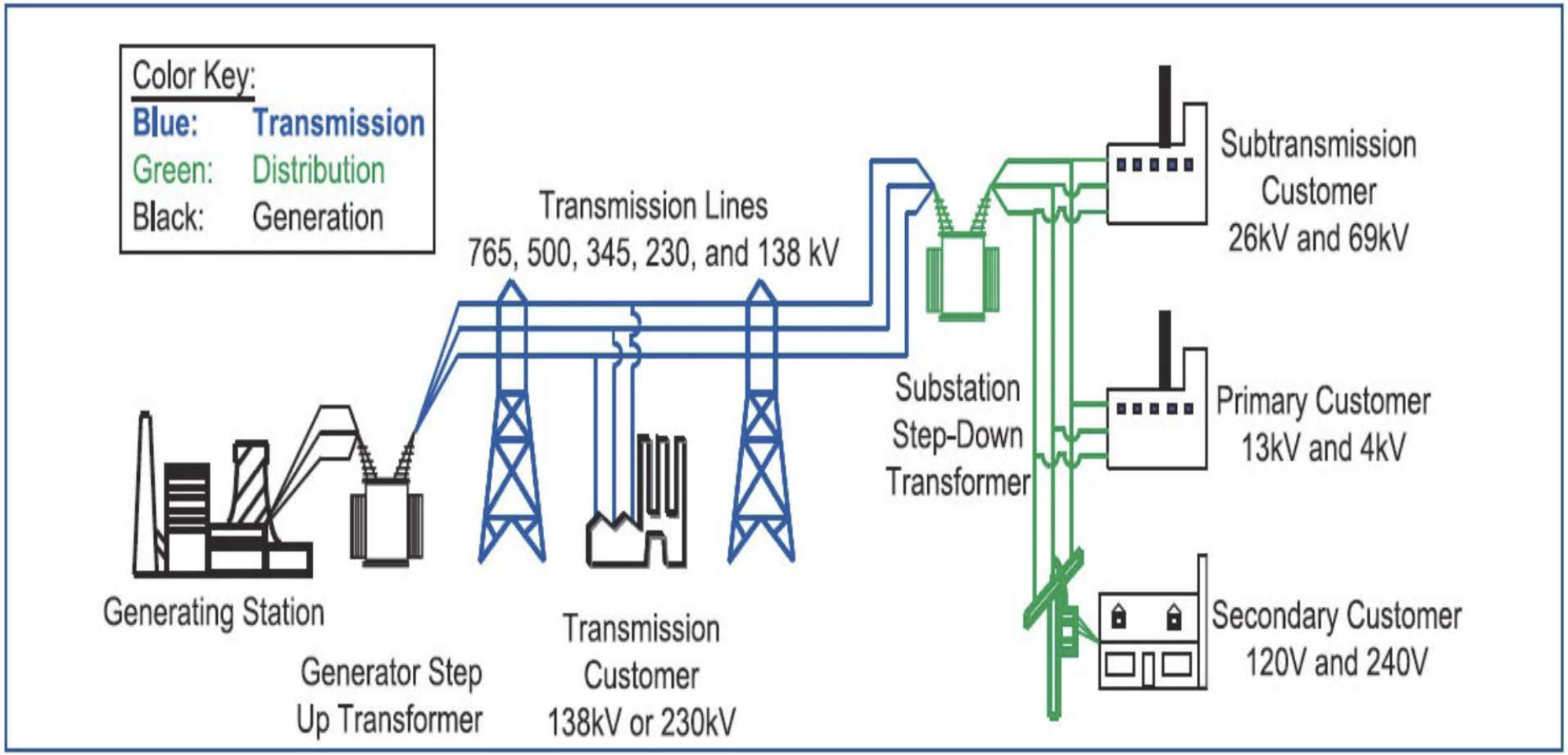

R.C. 4928.12 Qualifying Transmission Entities

Ohio law states that no entity shall own or control Ohio-based transmission facilities as defined by federal law unless the entity is a member of and transfers control of such facilities to, one or more operational qualifying transmission entities with specified attributes or performance capabilities:

(1) The transmission entity is approved by the federal energy regulatory commission.

(2) The transmission entity effects **separate control of transmission facilities from control of generation facilities**.

(3) The transmission entity implements, to the extent reasonably possible, policies and procedures designed to minimize pancaked transmission rates within this state.

(4) The transmission entity **improves service reliability within this state**.

(5) The transmission entity achieves the objectives of an open and competitive electric generation marketplace, elimination of barriers to market entry, and preclusion of control of bottleneck electric transmission facilities in the provision of retail electric service.

(6) The transmission entity is of **sufficient scope** or otherwise operates to substantially increase economical supply options for consumers.

(7) The governance structure or control of the transmission entity is independent of the users of the transmission facilities, and no member of its board of directors has an affiliation, with such a user or with an affiliate of a user during the member's tenure on the board, such as to unduly affect the transmission entity's performance. For the purpose of division (B)(7) of this section, a "user" is any entity or affiliate of that entity that buys or sells electric energy in the transmission entity's region or in a neighboring region.

(8) The transmission entity operates under policies that promote **positive performance** designed to satisfy the electricity requirements of customers.

(9) The transmission entity is capable of **maintaining real-time reliability** of the electric transmission system, ensuring comparable and nondiscriminatory transmission access and necessary services, **minimizing system congestion**, and further **addressing real or potential transmission constraints**.

Electric Distribution Service Reliability (Investor Owned Electric Distribution Utilities)

Each electric **distribution** utility subject to the supervisory jurisdiction of the Public Utilities Commission of Ohio must file an annual report providing information on the duration of customer interruptions and the number of customers interrupted.* The information excludes interruptions resulting from major storms. More specifically, the reports provide information that, among other things, is used to compute two distribution service reliability indices.

Customer Average Interruption Duration Interrupted ("CAIDI")

Total Duration of Customer Interruptions / Total Number of Customers

and

System Average Interruption Frequency Index ("SAIFI")

Total Number of Customer Interruptions/ Total Number of Customers Served

Based on these reports and as warranted, the utilities must file proposed action plans to remedy performance that falls below utility-specified standards.

*Ohio Administrative Code, 4901:1-10-10(B)(1)

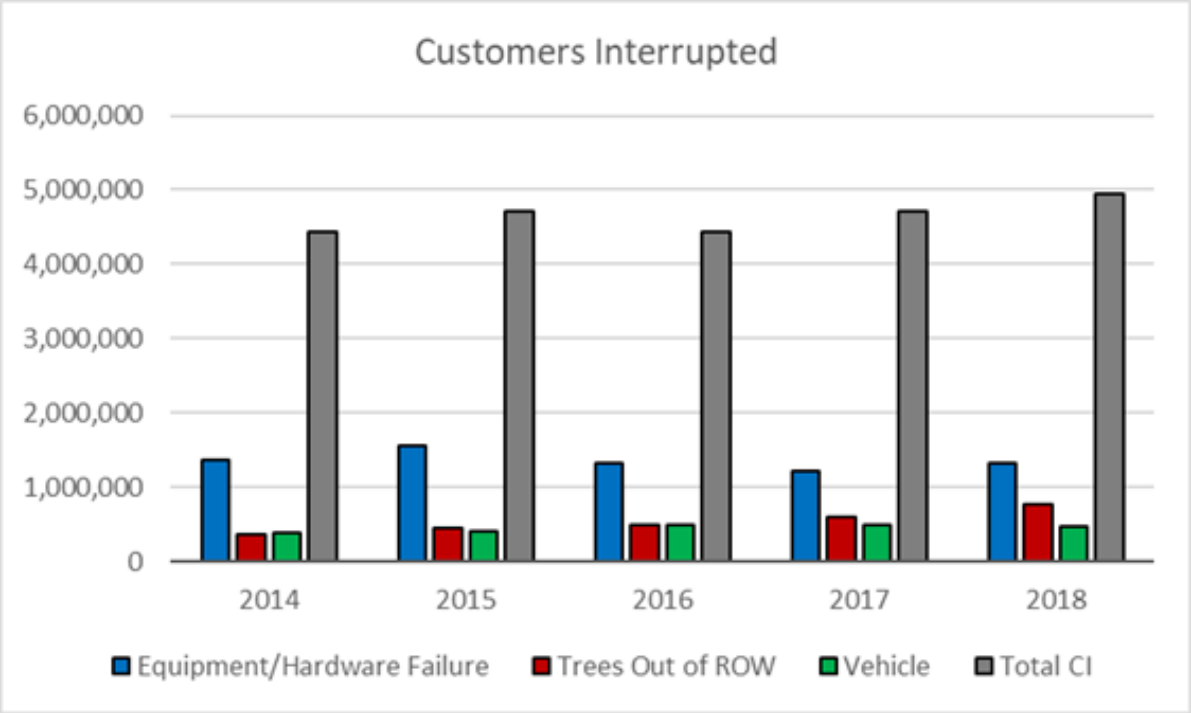
Customers Interrupted
6,000,000
5,000,000
4,000,000
3,000,000
2,000,000
1,000,000
0
2014
2015
2016
2017
2018
Equipment/Hardware Failure
Trees Out of ROW
Vehicle
Total CI

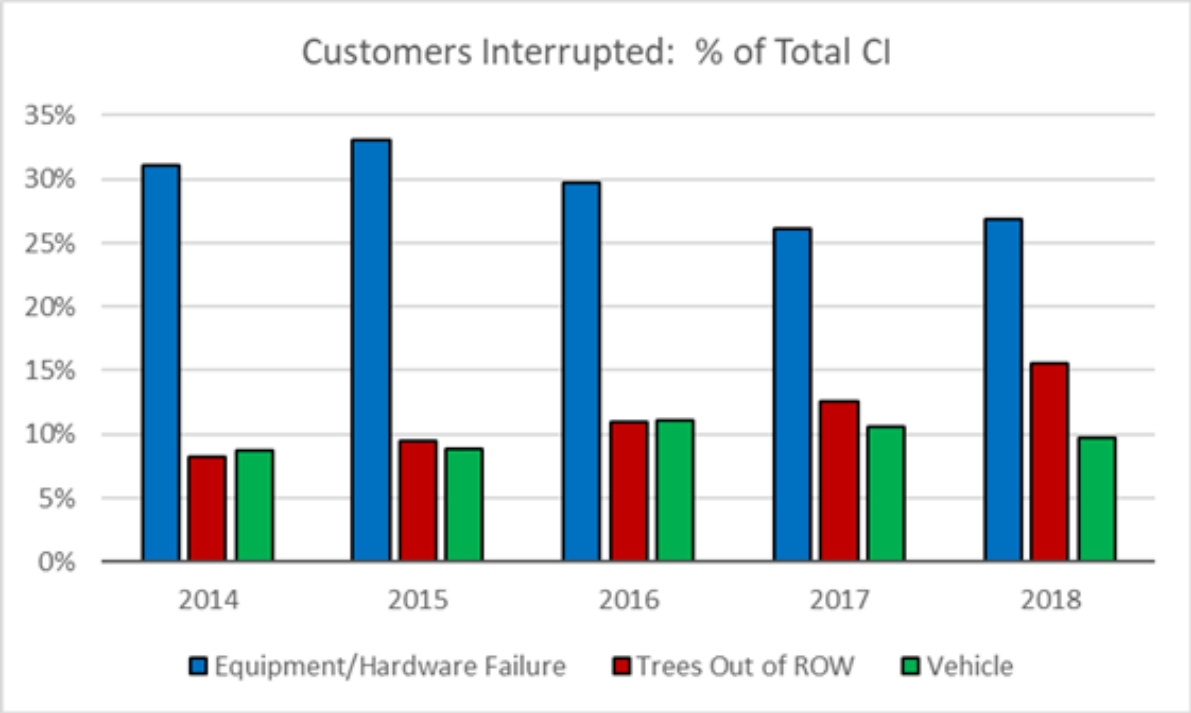
Customers Interrupted: % of Total CI
35%
30%
25%
20%
15%
10%
5%
0%
2014
2015
2016
2017
2018
Equipment/Hardware Failure
Trees Out of ROW
Vehicle

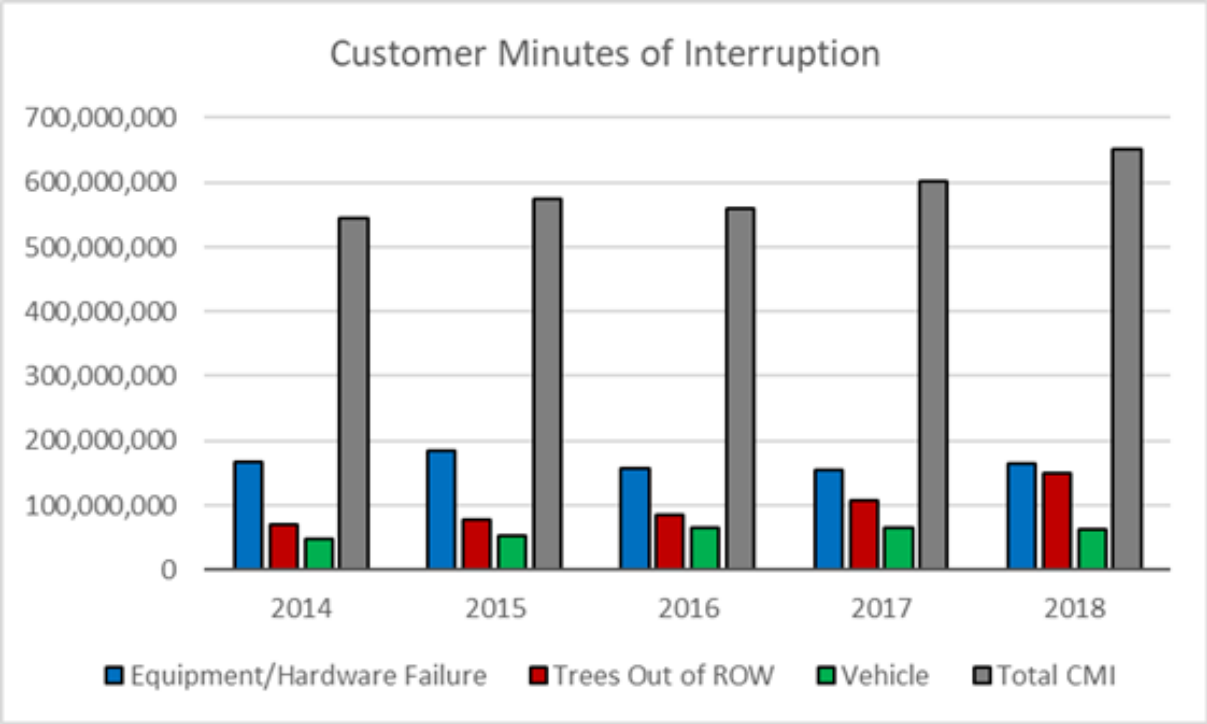
Customer Minutes of Interruption
700,000,000
600,000,000
500,000,000
400,000,000
300,000,000
200,000,000
100,000,000
0
2014
2015
2016
2017
2018
Equipment/Hardware Failure
Trees Out of ROW
Vehicle
Total CMI

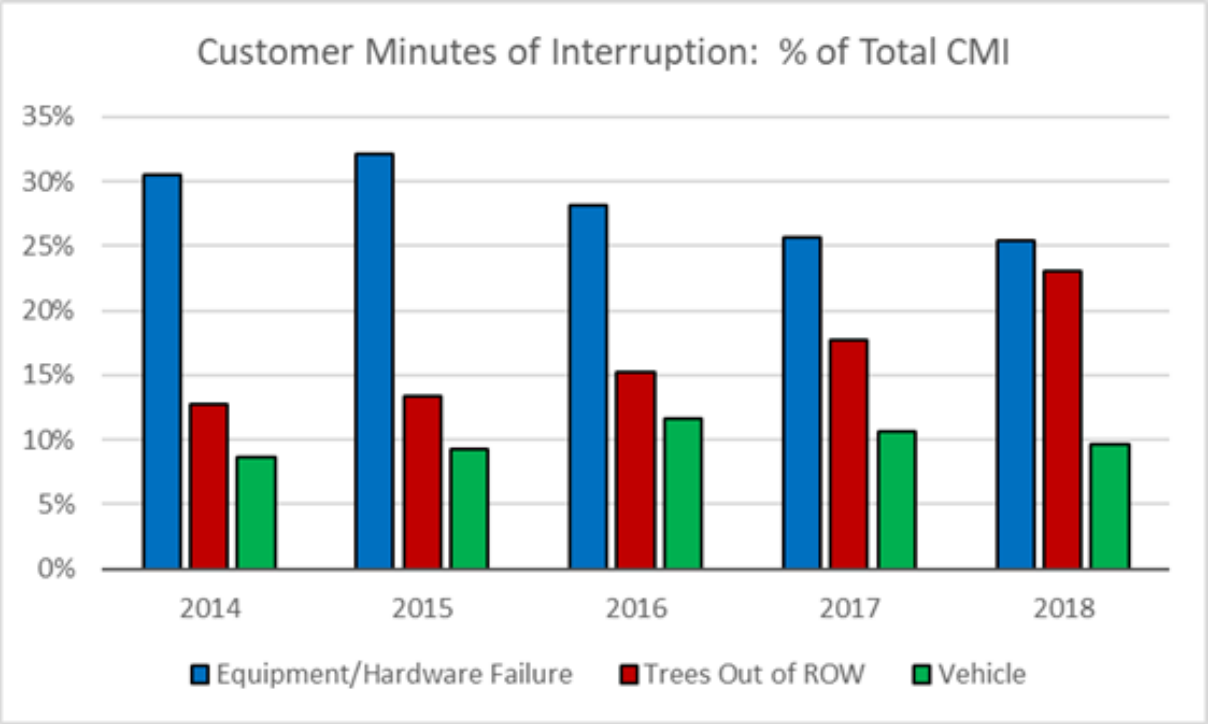
Customer Minutes of Interruption: % of Total CMI
35%
30%
25%
20%
15%
10%
5%
0%
2014
2015
2016
2017
2018
Equipment/Hardware Failure
Trees Out of ROW
Vehicle

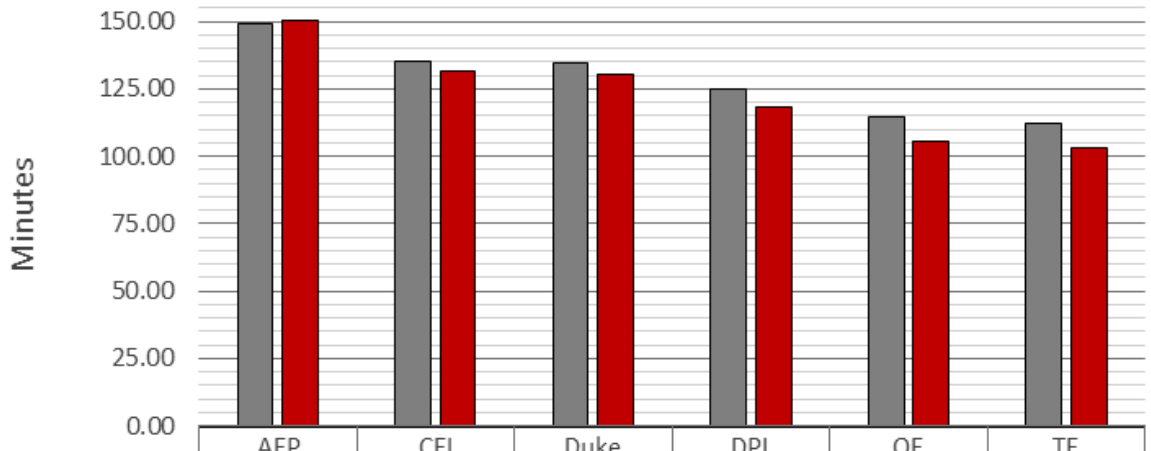

	AEP	CEI	Duke	DPL	OE	TE
Standard	149.00	135.00	134.34	125.04	114.37	112.30
Performance	150.32	131.65	130.22	118.41	105.40	103.07

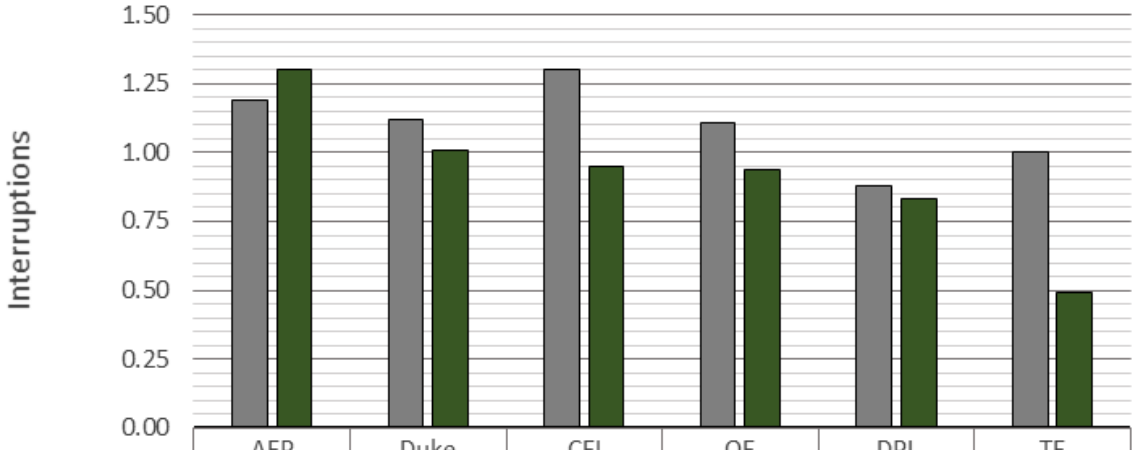

	AEP	Duke	CEI	OE	DPL	TE
Standard	1.19	1.12	1.30	1.11	0.88	1.00
Performance	1.30	1.01	0.95	0.94	0.83	0.49

"Keeping the lights on" is dependent on the successful coordinated completion of multiple functions with a necessary appreciation for their dynamic interrelationships.

Planning

Design

Construction

Operation

Maintenance

Restoration

Questions